82-14H
82/11.1

BULLETIN
NO.
LTA-1

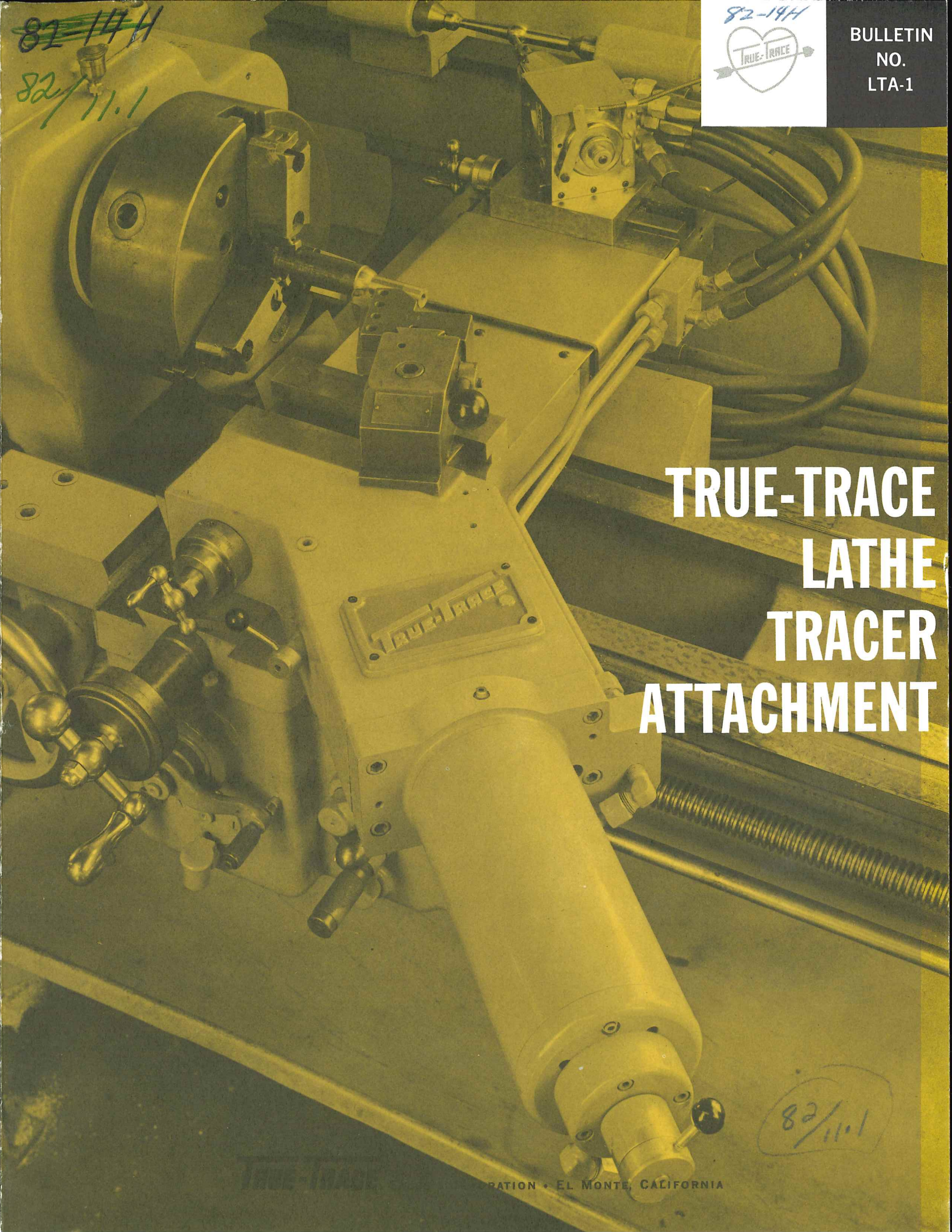

TRUE-TRACE LATHE TRACER ATTACHMENT

82/11.1

RATION • EL MONTE, CALIFORNIA

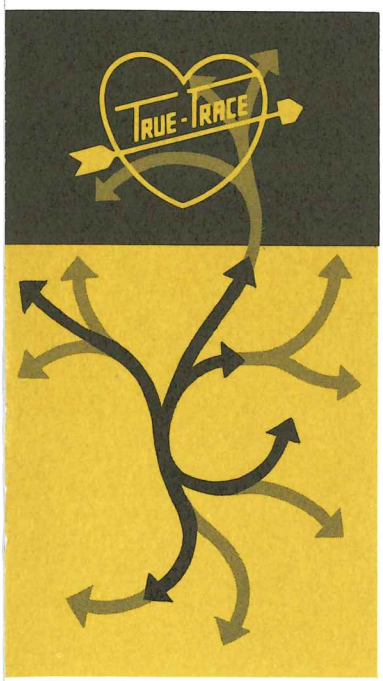

CONTOUR TURNING SIMPLIFIED
...with TRUE-TRACE LATHE ATTACHMENT!

Modern profiling requirements for lathe applications have evolved from the growing need to produce a greater volume of parts at a much faster rate, more accurately and at less cost than is possible with manual operation. TRUE-TRACE Single Dimension, 45° lathe tracer attachments are specifically designed and engineered to meet these requirements. These precision controls permit relatively unskilled labor to perform quickly and easily such tracing applications as step shaft turning, contour turning, and facing operations involving both simple and extremely complex contours. TRUE-TRACE's unique feature of accepting either round or flat templates allows an accurate work piece to be used as a template or utilizes a flat template depending on the nature of the job and specifications.

These high-precision, hydraulically powered attachments convert existing lathes into the modern concept of machine tool operation... but do not alter the lathe so that normal turning applications cannot be accomplished. The lead screw is retained for normal cross slide work while the longitudinal screw is not disturbed in any way. Engineered into the TRUE-TRACE single dimension lathe tracer attachment are unparalleled advantages in ease of operation and accuracy of reproduction—in keeping with other TRUE-TRACE precision machine tool control systems. Whatever the job or requirements, TRUE-TRACE Lathe Tracer Attachments provide the **ultimate** in precision, economical contour turning and profile facing!

APPLICATIONS AND FEATURES

ADAPTABLE TO MOST MAKES OF LATHES

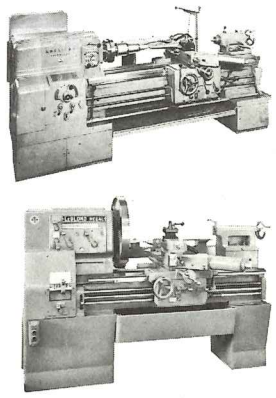

The **TRUE-TRACE** Single Dimension, 45° tracer conversion comes in a **complete** package adaptable to almost all makes of lathes. A new cross slide and tool post slide, precision single dimension hydraulic tracer and power unit, as well as template rail, and attachment brackets, template centers and flat template mounting plates are supplied. All necessary lines and fittings are provided —everything needed to convert a standard lathe to tracer turning is included.

NEW CROSS AND TOOL SLIDES

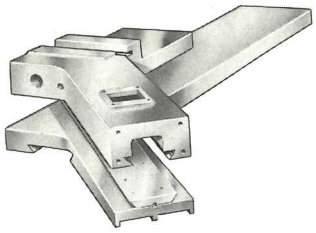

Newly designed and engineered cross and tool post slides cast of Meehanite—accurately machined and aligned with tapered gibs to precision tolerances are used. For added life and accuracy, the attachment package features a Nitralloy insert attached to the lower slide and a built-in oil reservoir in the upper slide.

FLAT OR ROUND TEMPLATES

Flat or round templates may be used with equal precision. Centers are provided for mounting of round templates while hold-down clamps allow mounting flat templates. This feature enables you to use accurately turned work pieces, or inexpensive flat patterns as templates.

The mounting of the template rail to the rear of the lathe leaves the entire front of the machine open to the operator and gives him clear visual access to the template.

MICROMETER TRACER ADJUSTMENT

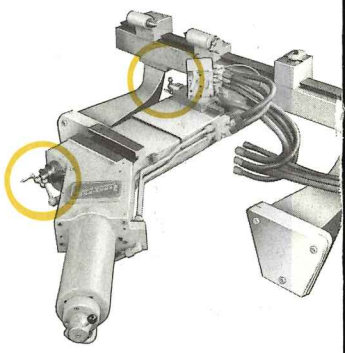

An extremely accurate relationship between the tracer stylus, the template and the work piece is maintained by micrometer adjustment screws in both the lateral and longitudinal positions. This feature allows accurate adjustments and assures positive operator control of the tracer for rough to finish turning.

The TRUE-TRACE single Dimension, 45° Lathe Tracer attachment has been tested under severe conditions and applications and has been proven by continued usage over a wide range of lathe operations. Like other TRUE-TRACE machine tool controls, the lathe attachment package features exceptional stability, precision and accuracy—at the same time assures long life and trouble-free service.

The lathe tracer attachment may be installed either by your own plant personnel or by TRUE-TRACE technicians. If you prefer to have TRUE-TRACE install the package, an experienced crew can complete the installation at your factory, or the installation can be accomplished in one of the conveniently located TRUE-TRACE machine conversion centers. Whichever your preference, TRUE-TRACE engineers are always ready to assist you.

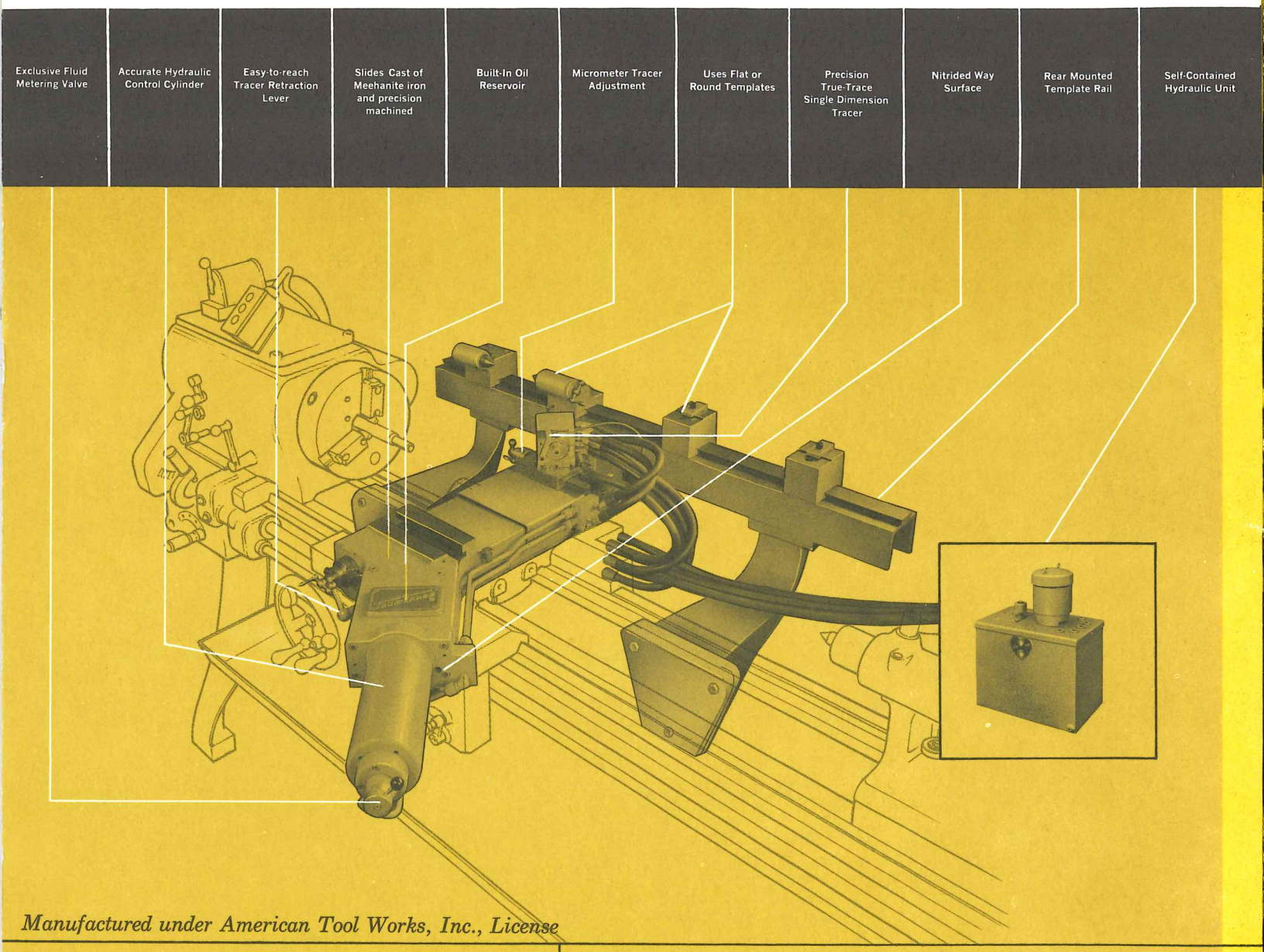

Manufactured under American Tool Works, Inc., License

Sponsor of the Contour Machining Conferences

TRUE-TRACE

SALES CORPORATION
9830 East Rush Street, El Monte, California

BRANCH PLANTS
• 35 Urban Avenue, Westbury, Long Island, New York
• 2401 Eaton Lane, Racine, Wisconsin